EC / DC centrifugal fans

backward curved, Ø 355 mm

Material/surface

- Impeller: PA66 plastic, black
- Rotor: Painted black
- Electronics housing: Die-cast aluminium

Mechanical data

- Direction of rotation: Clockwise viewed toward rotor
- Mode: Continuous operation (S1)
- Mounting: Maintenance-free ball bearings
- Cable exit: lateral

Standards and approvals

- Conformity with standards: see page 6
- Approvals: EAC

on Page 66	Drawings
on Page 182	Accessories
on Page 192	Connection diagrams and technical features
on Page 204	Technical parameters & scope
More at	www.ebmpapst.com

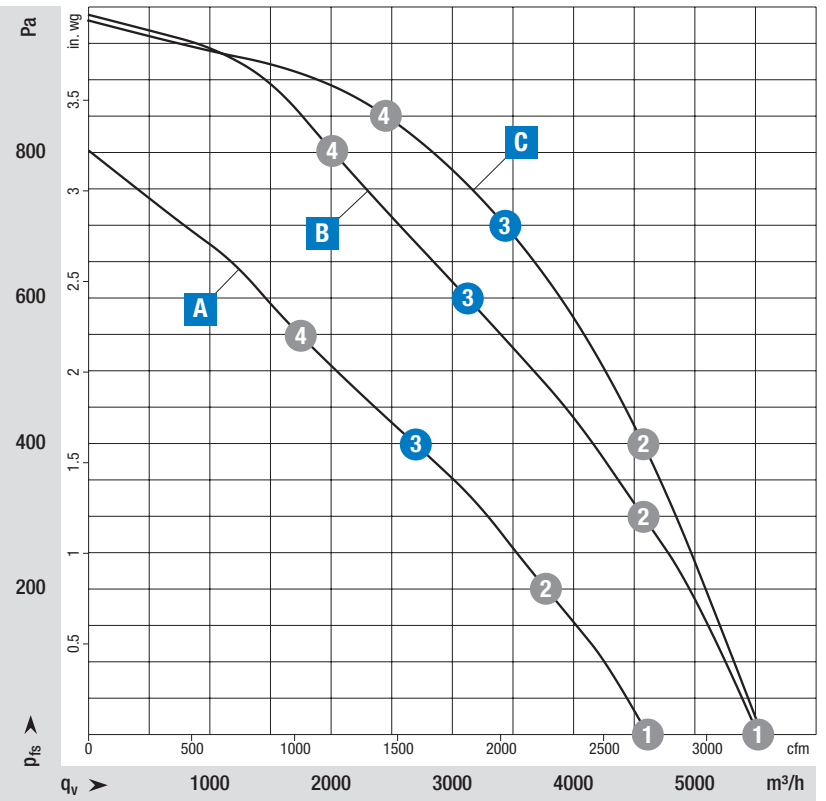

Measuring requirements

Air performance measured according to: ISO 5801, installation category A, with ebm-papst inlet ring without contact protection. Intake-side sound level: L_wA according to ISO 13347, L_pA measured at 1 m distance from fan axis. The values given are only applicable under the specified measuring conditions and may differ depending on the installation conditions. In the event of deviation from the standard configuration, the parameters must be checked in installed condition.

Curve	Operating point	Nominal voltage	Speed n	Max. Input power P_{ed}	Max. Input current I	Sound power level LwA	Protection class	Installation position	Perm. ambient temp.	Degree of protection	Insulation class	Conn. diagram
		VDC	rpm	W	A	dB(A)			°C			
Voltage range 77-138 V DC												
A	1	110	2035	475	4,32	81	I	Shaft horizontal or rotor on bottom	-40..+60	IP 55 acc. to EN 60529	F	BA6)
	2	110	1905	500	4,70	76						
	3	**110**	**1830**	**500**	**4,70**	**70**						
	4	110	1885	500	4,70	74						
B	1	110	2400	759	6,89	93	I	Shaft horizontal or rotor on bottom	-40..+60	IP 55 acc. to EN 60529	F	BA6)
	2	110	2285	880	8,00	85						
	3	**110**	**2200**	**880**	**8,00**	**75**						
	4	110	2270	880	8,00	78						
Nominal voltage range 380-480 V AC												
C	1	400	2400	777	1,20	90	I	Shaft horizontal or rotor on bottom	-40..+60	IP 55 acc. to EN 60529	F	BA7)
	2	400	2400	1037	1,59	83						
	3	**400**	**2400**	**1100**	**1,70**	**75**						
	4	400	2400	1056	1,62	77						

Values set in blue are nominal data at operating point with maximum load.

Subject to change

Curve	Centrifugal fan	
	Part number	Weight kg
A	R3G355RS13P1	5,50
B	R3G355RJ85S1	8,40
C	R3G333RJ76N1	8,40

A R3G355RS13P1 (Centrifugal fan)

Dimensions in mm

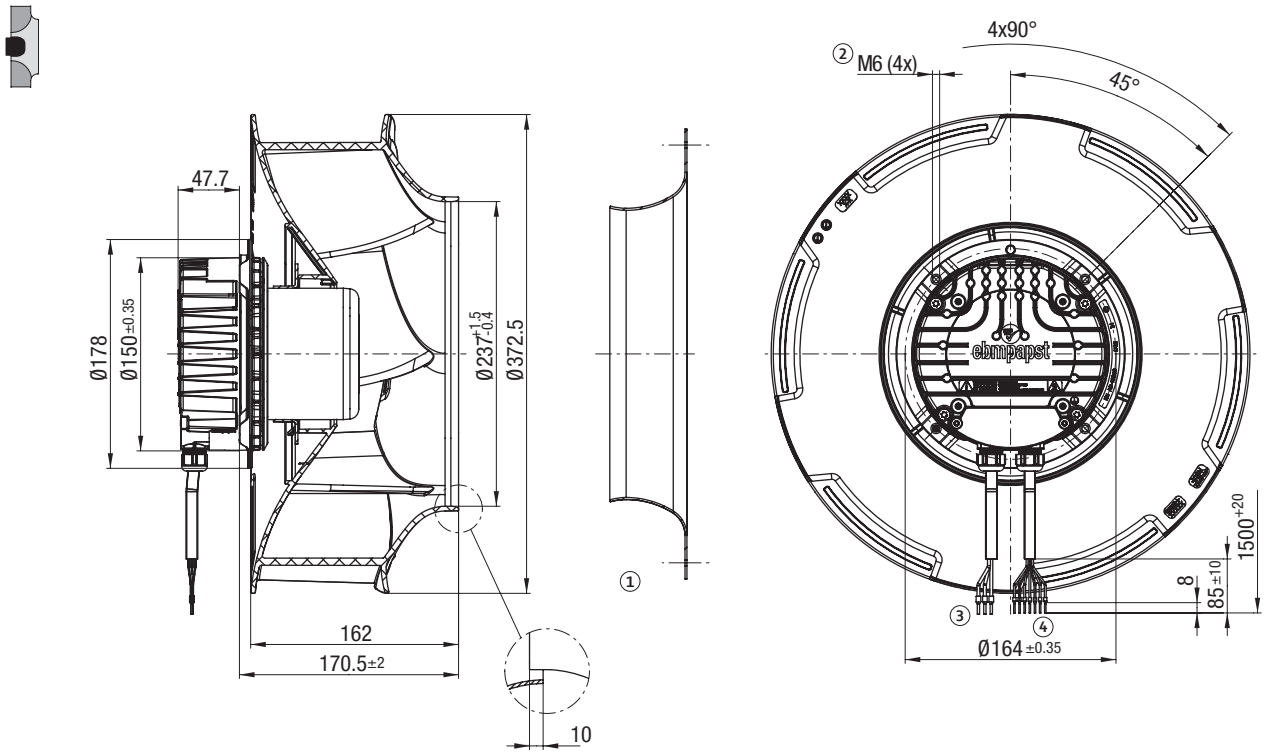

① **Accessory part**: Inlet ring 35500-2-4013, not included in scope of delivery
Dimensions: see "Accessories" chapter

② **Max. clearance of screw:** max. 16 mm

③ **Cable (halogen-free):** 3x BETAtrans® 3 GKW flex, 4G 1.5 mm², 3x crimped ferrules

④ **Cable (halogen-free):** 7x BETAtrans® 3 GKW flex, 7x 0.5 mm², 7x crimped ferrules

Pin assignment: see connection diagram

B K3G355RJ85S1 (Centrifugal fan)

Dimensions in mm

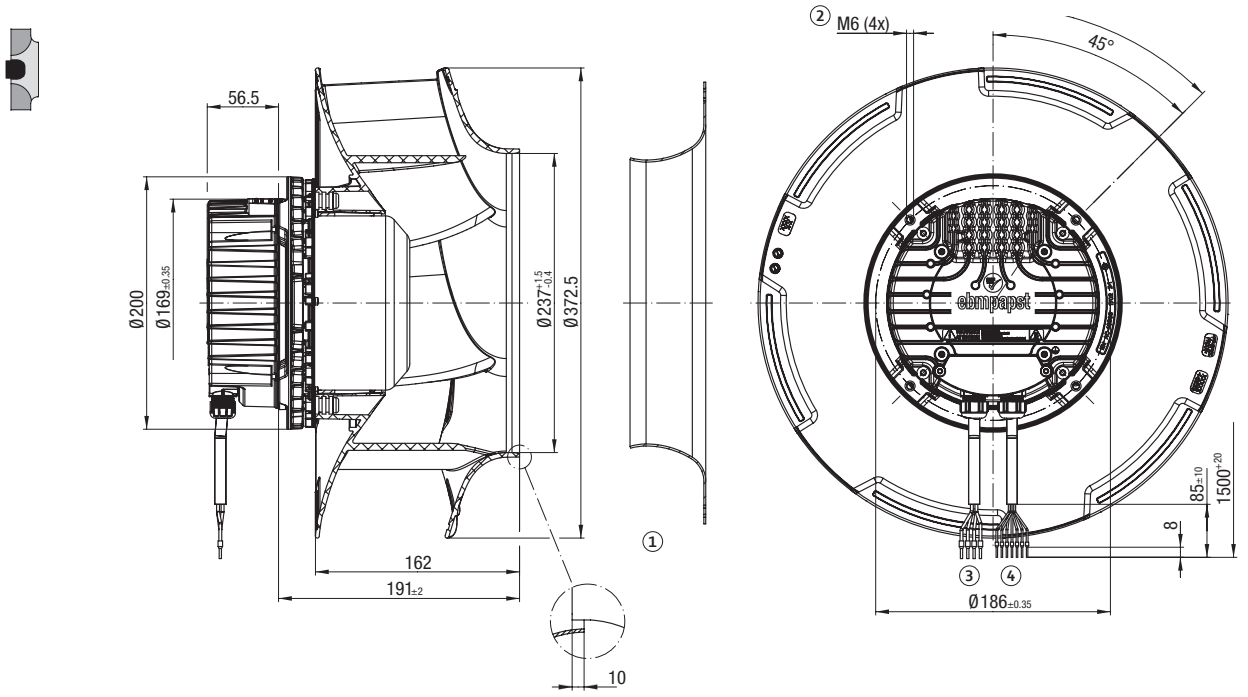

① **Accessory part**: Inlet ring 35500-2-4013, not included in scope of delivery
Dimensions: see "Accessories" chapter

② **Max. clearance of screw:** max. 16 mm

③ **Cable (halogen-free):** 3x BETAtrans® 3 GKW flex, 4G 1.5 mm², 3x crimped ferrules

④ **Cable (halogen-free):** 7x BETAtrans® 3 GKW flex, 7x 0.5 mm², 7x crimped ferrules

Pin assignment: see connection diagram

C R3G355RJ76N1 (Centrifugal fan)

Dimensions in mm

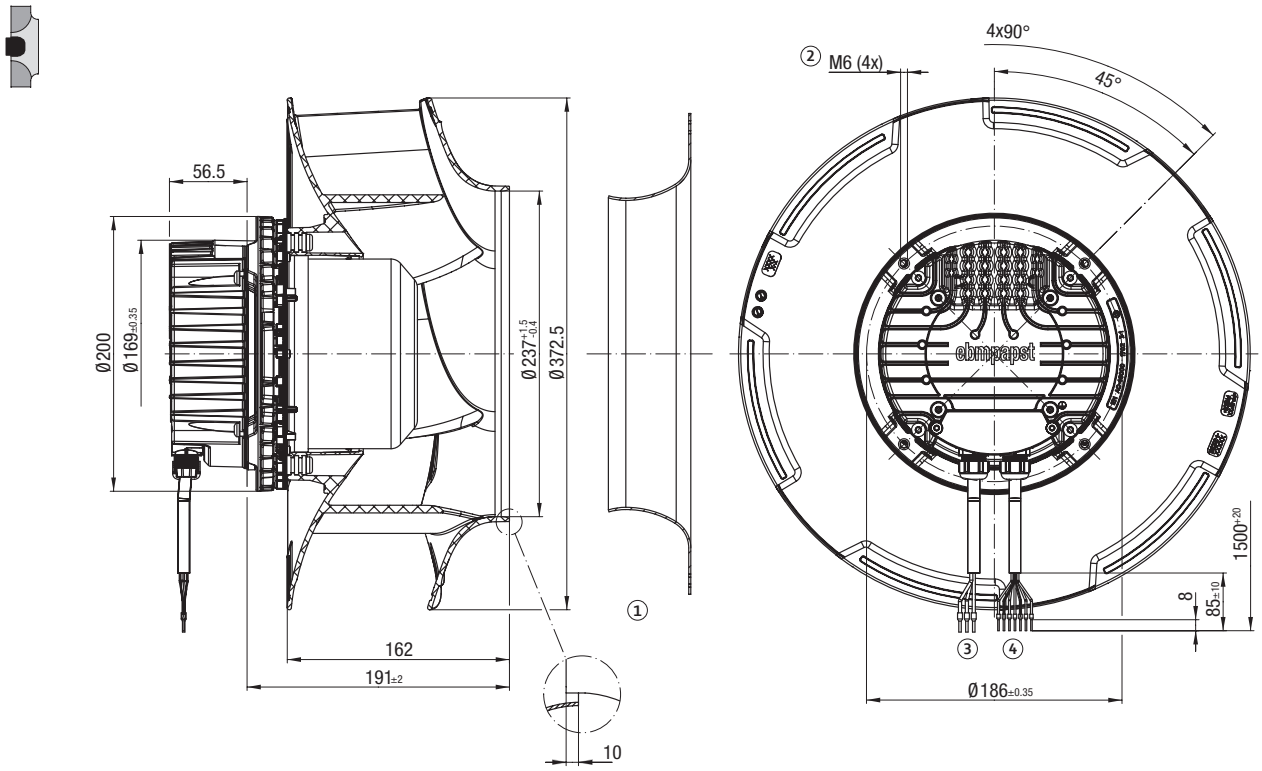

① **Accessory part**: Inlet ring 35500-2-4013, not included in scope of delivery
Dimensions: see "Accessories" chapter

② **Max. clearance of screw:** max. 16 mm

③ **Cable (halogen-free):** 4x BETAtrans® 3 GKW flex, 4G 1.5 mm², 4x crimped ferrules

④ **Cable (halogen-free):** 7x BETAtrans® 3 GKW flex, 7x 0.5 mm², 7x crimped ferrules

Pin assignment: see connection diagram