EC / DC centrifugal fans

backward curved, Ø 250 mm

on Page 32	Drawings
on Page 182	Accessories
on Page 192	Connection diagrams and technical features
on Page 204	Technical parameters & scope
More at	www.ebmpapst.com

Material/surface

- Impeller: PA66 plastic, black
- Rotor: Painted black/galvanized
- Electronics housing: Die-cast aluminium
- Support structure: Aluminium
- Inlet ring: Sheet steel, galvanized

Mechanical data

- Direction of rotation: Clockwise viewed toward rotor
- Mode: Continuous operation (S1)
- Mounting: Maintenance-free ball bearings
- Cable exit: lateral

Standards and approvals

- Conformity with standards: see page 6
- Approvals: EAC

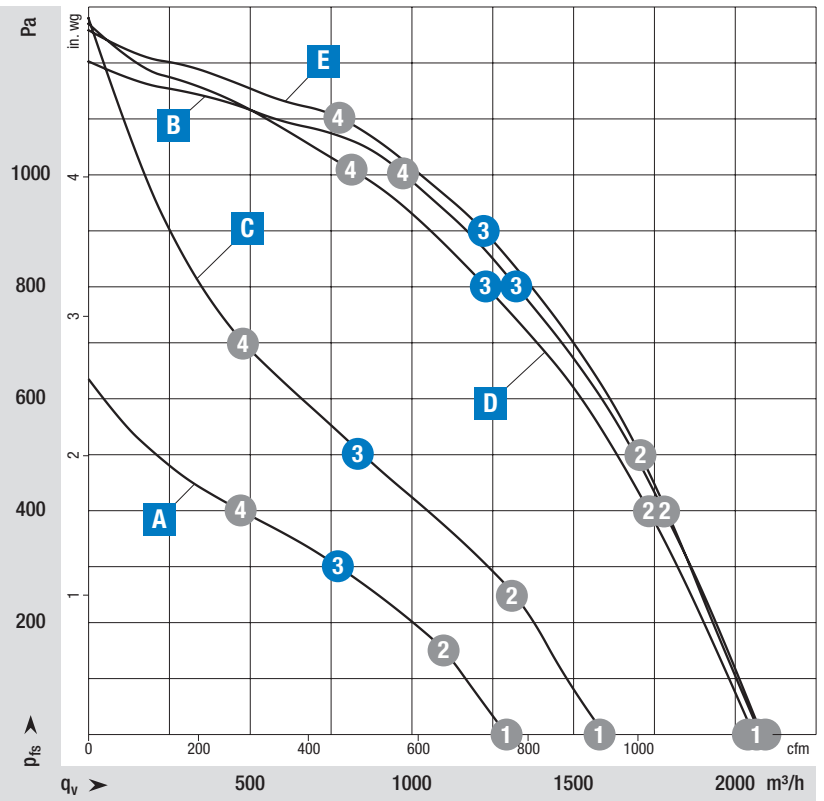

Measuring requirements

Air performance measured according to: ISO 5801, installation category A, with ebm-papst inlet ring without contact protection. Intake-side sound level: L_wA according to ISO 13347, L_pA measured at 1 m distance from fan axis. The values given are only applicable under the specified measuring conditions and may differ depending on the installation conditions. In the event of deviation from the standard configuration, the parameters must be checked in installed condition.

Curve	Operating point	Nominal voltage	Speed n	Max. Input power P_{ed}	Max. Input current I	Sound power level LwA	Protection class	Installation position	Perm. ambient temp.	Degree of protection	Insulation class	Conn. diagram
		VDC	rpm	W	A	dB(A)			°C			
Voltage range 16-32 V DC												
A	1	24	2500	120	4,90	75	III	Shaft horizontal or rotor on bottom	-25..+60	Motor: IP 24 KM Electr.: IP 66/69 K	B	BA1)
	2	24	2420	123	5,14	73						
	3	**24**	**2350**	**130**	**5,39**	**69**						
	4	24	2420	124	5,16	71						
B	1	24	3860	410	15,8	87	III	Any	-40..+70	Motor: IP 24 KM Electr.: IP 66/69 K	B	BA4)
	2	24	3860	513	19,8	85						
	3	**24**	**3860**	**568**	**21,9**	**81**						
	4	24	3860	560	21,6	82						
Voltage range 77-138 V DC												
C	1	110	3195	250	2,30	84	I	Any	-40..+60	IP 6K9K	B	BA5)
	2	110	3045	250	2,30	79						
	3	**110**	**2950**	**250**	**2,30**	**73**						
	4	110	3130	250	2,30	78						
D	1	110	3860	447	4,06	86	I	Shaft horizontal or rotor on bottom	-40..+60	IP 55 acc. to EN 60529	F	BA6)
	2	110	3815	510	4,64	83						
	3	**110**	**3800**	**540**	**4,90**	**80**						
	4	110	3840	510	4,63	82						
Nominal voltage range 380-480 V AC												
E	1	400	4000	476	0,78	87	I	Shaft horizontal or rotor on bottom	-40..+70	IP 55 acc. to EN 60529	F	BA7)
	2	400	4000	560	0,92	84						
	3	**400**	**4000**	**595**	**0,95**	**82**						
	4	400	4000	537	0,87	86						

Values set in blue are nominal data at operating point with maximum load.

Subject to change

Curve	Centrifugal fan		with support structure	
	Part number	Weight kg	Part number	Weight kg
A	R1G250RC8781	2,00	-----	-----
B	R3G250RU2781	2,80	K3G250RU2781	8,70
C	R3G250RY90P1	2,30	-----	-----
D	R3G250RR09P1	4,10	K3G250RR09P1	9,20
E	R3G250RR04N1	4,60	K3G250RR04N1	11,70

A R1G250RC8781 (Centrifugal fan)

Dimensions in mm

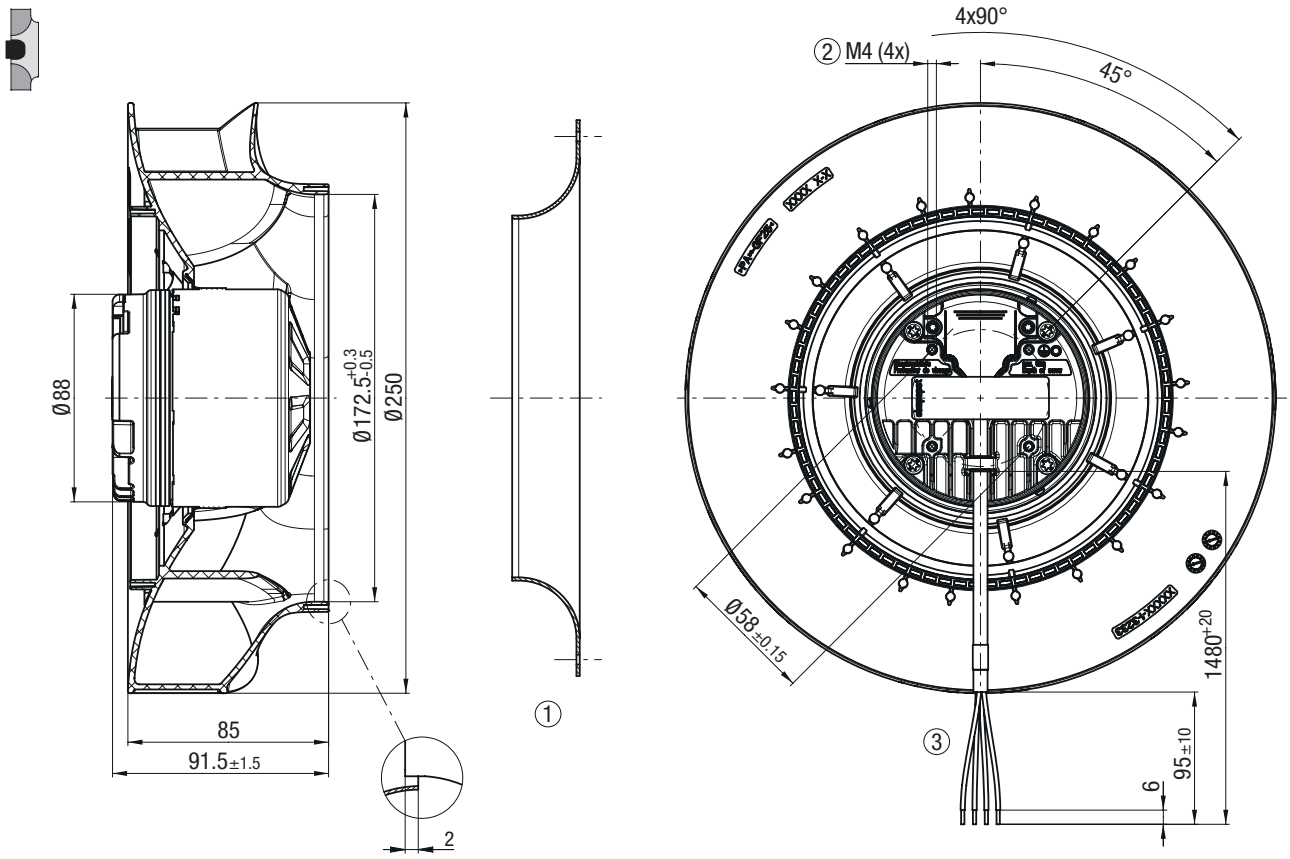

① **Accessory part**: Inlet ring 96359-2-4013, not included in scope of delivery
Dimensions: see "Accessories" chapter

② **Max. clearance of screw:** max. 6 mm

③ **Cable:** 4x BETAtrans® GKW R 0.75 mm², 4x crimped splices

Pin assignment: see connection diagram

B R3G250RU2781 (Centrifugal fan)

Dimensions in mm

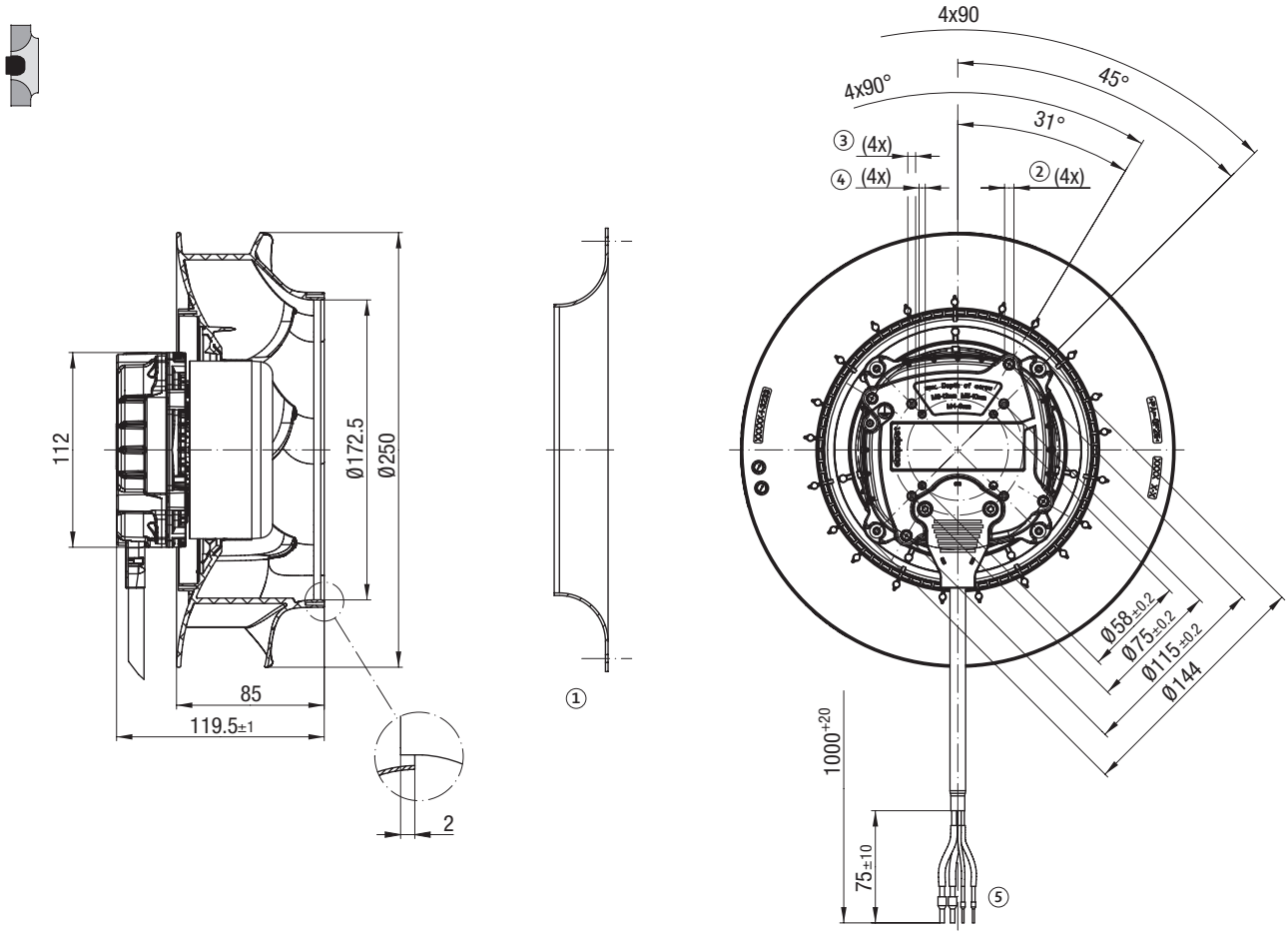

B K3G250RU2781 (Centrifugal fan with support structure)

Dimensions in mm

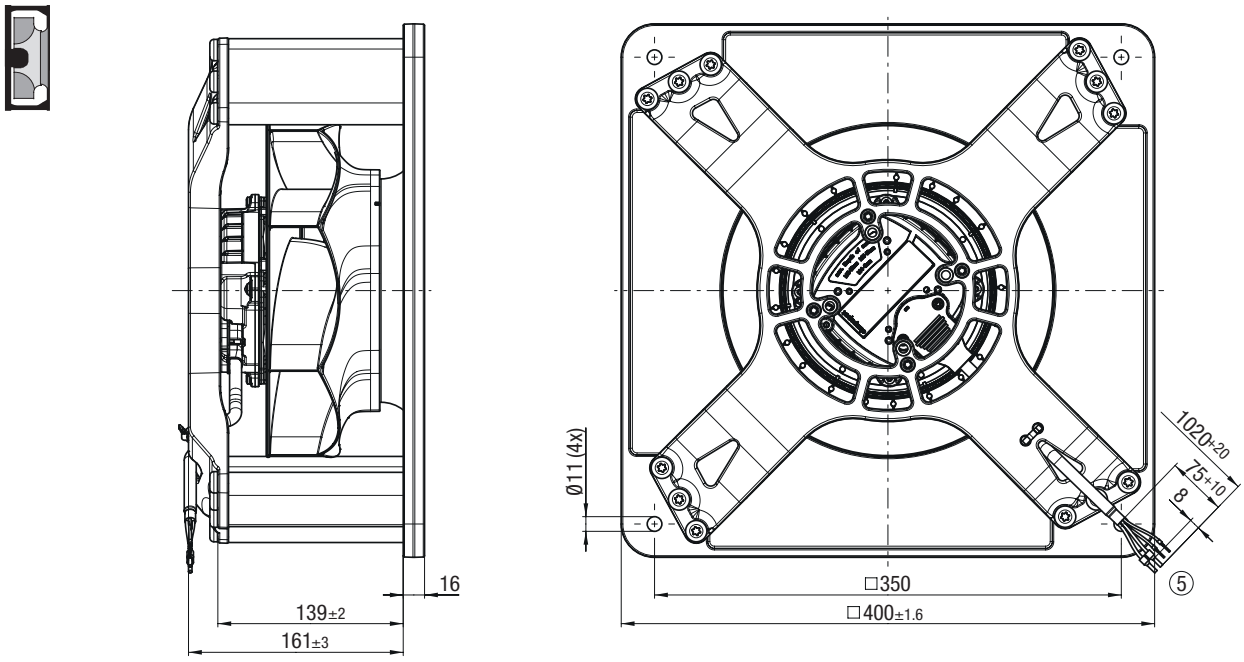

① **Accessory part**: Inlet ring 96359-2-4013, not included in scope of delivery
Dimensions: see "Accessories" chapter

② **Max. clearance of screw:** max. 12 mm, tapping hole ready for self-tapping M6 screw

③ **Max. clearance of screw:** max. 10 mm, tapping hole ready for self-tapping M_5 screw

④ **Max. clearance of screw:** max. 8 mm, tapping hole ready for self-tapping M_4 screw

⑤ **Cable (halogen-free):** 2x BETAtrans® GKW R 2.5 mm², 2x crimped ferrules
2x BETAtrans® GKW R 1.0 mm², 2x crimped ferrules

Pin assignment: see connection diagram

Mounting Dimensions for centrifugal modules:
see "Accessories" chapter

C R3G250RY90P1 (Centrifugal fan)

Dimensions in mm

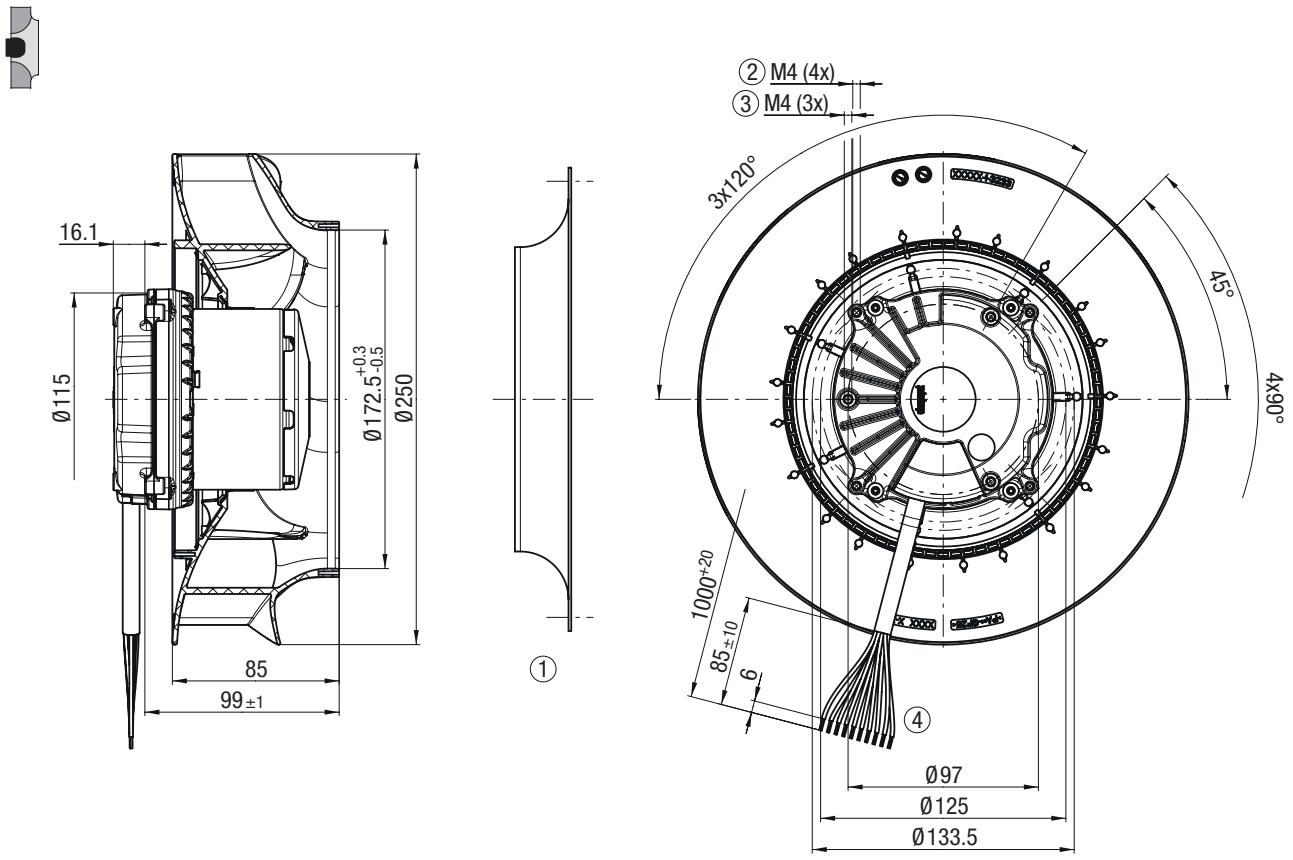

① **Accessory part**: Inlet ring 96359-2-4013, not included in scope of delivery
Dimensions: see "Accessories" chapter

② **Max. clearance of screw:** max. 10 mm

③ **Max. clearance of screw:** max. 8 mm

④ **Cable (halogen-free):** BETAtrans® GKW Flex R, 10G 1.0 mm², 10x crimped splices

Pin assignment: see connection diagram

D R3G250RR09P1 (Centrifugal fan)

Dimensions in mm

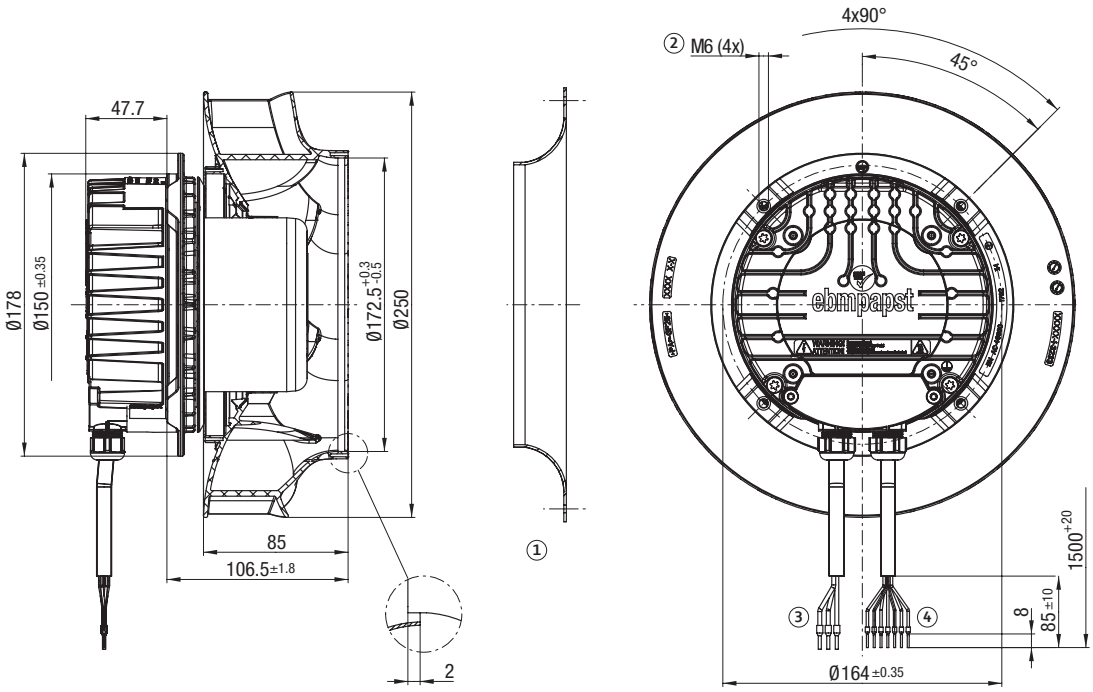

D K3G250RR09P1 (Centrifugal fan with support structure)

Dimensions in mm

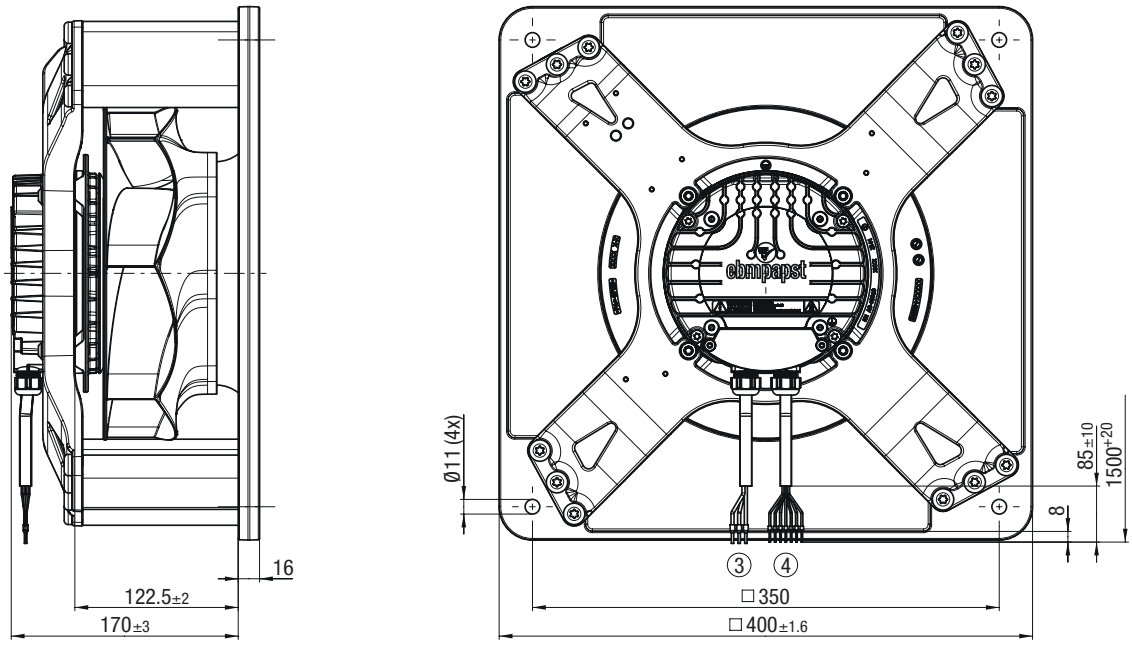

① **Accessory part**: Inlet ring 96359-2-4013, not included in scope of delivery
Dimensions: see "Accessories" chapter

② **Max. clearance of screw:** max. 16 mm

③ **Cable (halogen-free):** 3x BETAtrans® 3 GKW flex, 4G 1.5 mm², 3x crimped ferrules

④ **Cable (halogen-free):** 7x BETAtrans® 3 GKW flex, 7x 0.5 mm², 7x crimped ferrules

Pin assignment: see connection diagram

Mounting Dimensions for centrifugal modules:
see "Accessories" chapter

E R3G250RR04N1 (Centrifugal fan)

Dimensions in mm

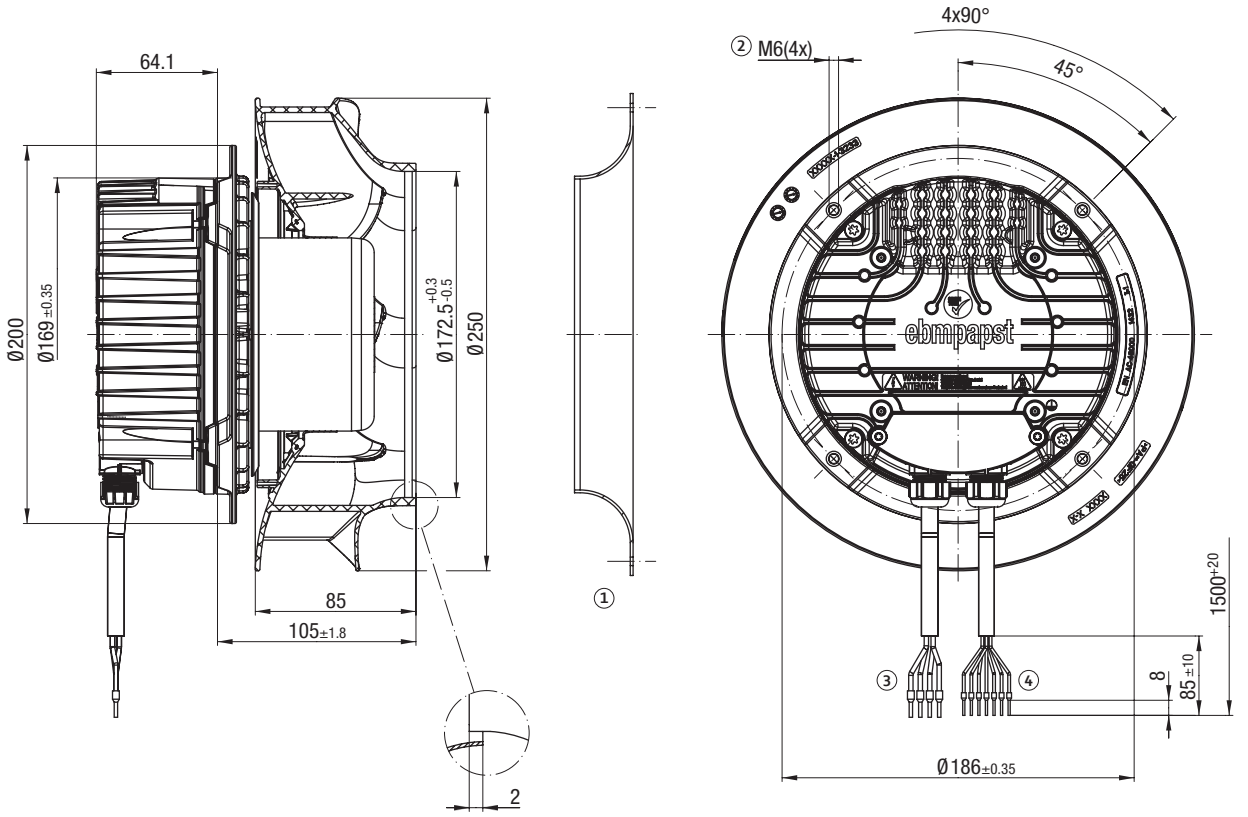

E K3G250RR04N1 (Centrifugal fan with support structure)

Dimensions in mm

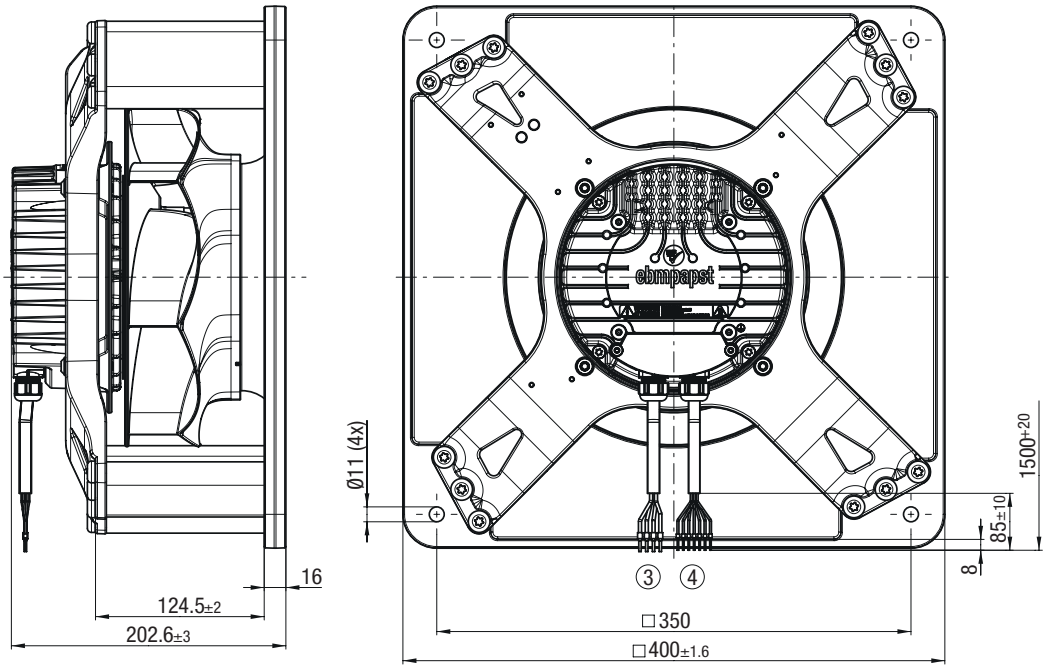

① **Accessory part**: Inlet ring 96359-2-4013, not included in scope of delivery
Dimensions: see "Accessories" chapter

② **Max. clearance of screw:** max. 16 mm

③ **Cable (halogen-free):** 4x BETAtrans® 3 GKW flex, 4G 1.5 mm², 4x crimped ferrules

④ **Cable (halogen-free):** 7x BETAtrans® 3 GKW flex, 7x 0.5 mm², 7x crimped ferrules

Pin assignment: see connection diagram

Mounting Dimensions for centrifugal modules:
see "Accessories" chapter